WELDING	CORNER CHAMFERING	DIMENSION TOLERANCE	MACHINED SURFACE	TOLERANCE DIMENSION	0.5 ~ 6	6 ~ 30	30 ~ 120	120 ~ 315	315 ~ 1000	1000 ~ 2000
a	C = 0.3~1.2 R = 0.3~1.2				±0.1	±0.2	±0.3	±0.5	±0.8	±1.2

SURFACE ROUGHNESS									
Ra	√	25/	12.5/	6.3/	3.2/	1.6/	0.8/	0.4/	0.2/
Rmax		100S	50S	25S	12.5S	6.3S	3.2S	0.8S	0.4S
SYMBOL	~	▽		▽▽		▽▽▽		▽▽▽▽	

NOTE

-. All materials applied are suitable in specified ambient temperature.
-. KCE Inc reserves the right to alter or amend the above information without notice.
-. According to detail drawing, the drawing can be changed.

NO.	DESCRIPTIONS	MAT'L	Q'TY	WEIGHT KG. UNIT	WEIGHT KG. TOTAL	REMARKS.
1	SAFETY LATCH	SPC	1			
2	UPPER LIMIT S/W	SS400	1			
3	LOAD LIMITER	-	1			
4	T/S LIMIT S/W	-	2			
5	EMERGENCY STOP BUTTON S/W	-	1			

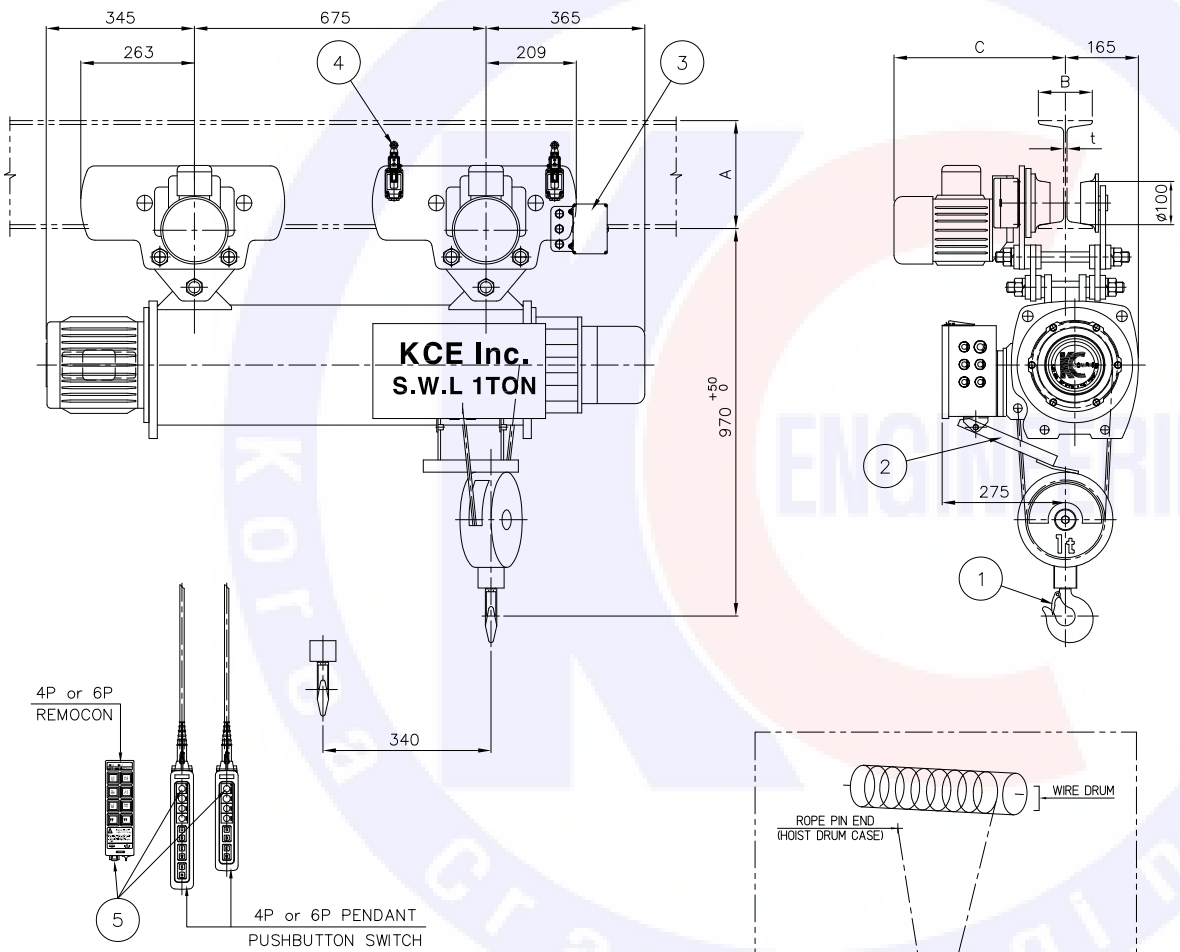

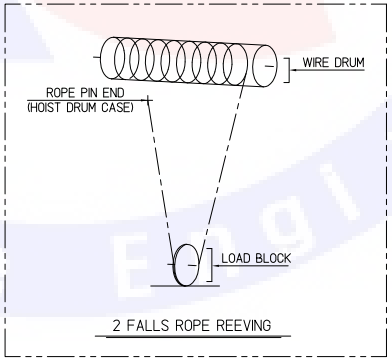

2 FALLS ROPE REEVING

S P E C I F I C A T I O N			
HOISTING LOAD		1000 KG	
TESTING LOAD		1250 KG	
LIFT		24 M	
RATING		30 MIN	
HOISTING (40% ED)	SPEED	HIGH	10 M/MIN
		LOW	5 M/MIN
	MOTOR	HIGH	2.4 KW x 4 P
		LOW	1.2 KW x 8 P
	BRAKE	DC MAG' DISC BRAKE	
TRAVERSING (40% ED)	SPEED	HIGH	20 M/MIN
		LOW	13 M/MIN
	MOTOR (2UNIT)	HIGH	0.4 KW x 4 P
		LOW	0.2 KW x 6 P
	BRAKE	DC MAG' DISC BRAKE	
WIRE ROPE		(19x7)+FC ø8 x 2 FALLS	
POWER SOURCE		AC 3phase 380V, 415V 50Hz 440V, 480V	
TRAVERSING RAIL		I-BEAM / H-BEAM	
AMBIENT TEMPERATURE		0°C....+45°C	
WEIGHT		290 KG	
REMARK			

T/S I-BEAM SIZE AxBxt	C	Ix(Cm^4)	Zx(Cm^3)	SPAN
I-200x100x7/10t	385	2170	217	4.6M max.
I-250x125x7.5/12.5t	395	5180	414	6.5M max.
I-300x150x10/18.5t	410	12700	849	9.0M max.

BASE OF DUTY

HOISTING : FEM 2m, ISO M5
CROSS TRAVEL : FEM 2m, ISO M5

DRAWING TITLE : N01-N-H24
ARRANGEMENT DRAWING FOR HOIST

DRAW : PARK.D.S	DESN : PARK.H.J	CHED : CHOI.S.J	APPD : SEO.Y.K

REF. No. :

THIS DRAWING IS THE PROPERTY OF KCE Inc COMPANY LIMITED AND MUST NOT BE PASSED ON TO ANY PERSON OR BODY NOT AUTHORISED BY US TO RECEIVE IT NOR BE COPIED OR OTHERWISE MADE USE EITHER IN PART BY SUCH PERSON OR BODY WITHOUT OUR PRIOR PERMISSION IN WRITING.

No.	Date	Description	Drawn	Checked	Reviewed	Approved
0	2024.02.26	ISSUE FOR APPROVAL	Y.K.SEO	J.G.SHIN	M.G.SHIN	R.B.PARK

TEL. NO. +82-70-4068-7985
FAX. NO. +82-32-233-7964
E-mail. sales@newkce.com

KCE Inc.

SCALE	N.S	DATE	24.02.26	REV
DWG No.	N0100-GA014			0

A3(297x420mm)